PARTS LIST RC-TYPE HYDRAULIC ROTATING CYLINDERS

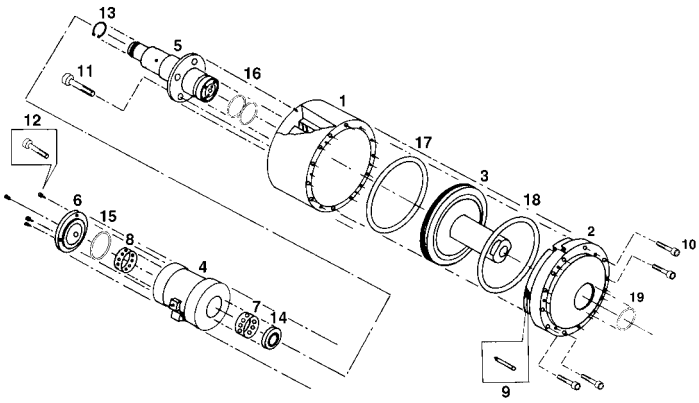

Fig	Part name Type
1	Cylinder body
2	Cylinder cover
3	Piston
4	Housing
5	Rotation valve
6	Housing cover
7	Bearing
8	Bearing
9	Guide pin
10	Cap screw
11	Cap screw
12	Cap screw
13	Snap ring
14	Oil seal
15	"O" ring
16	"O" ring
17	"O" ring
18	"O" ring
19	"O" ring